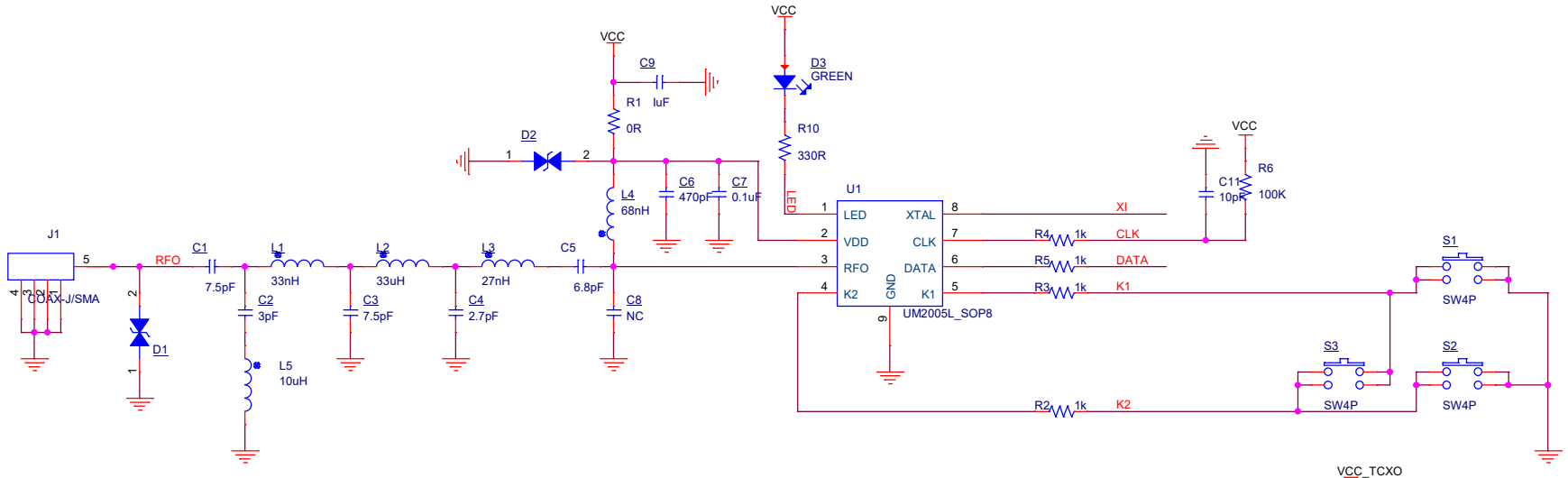

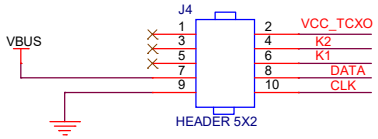

BATTERY SOCKET



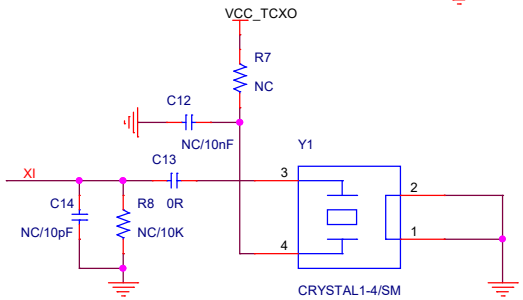

Title	<Title>	
Size B	Document Number <Doc>	Rev <RevCode>
Date: Monday, April 17, 2023	Sheet 1 of 1	